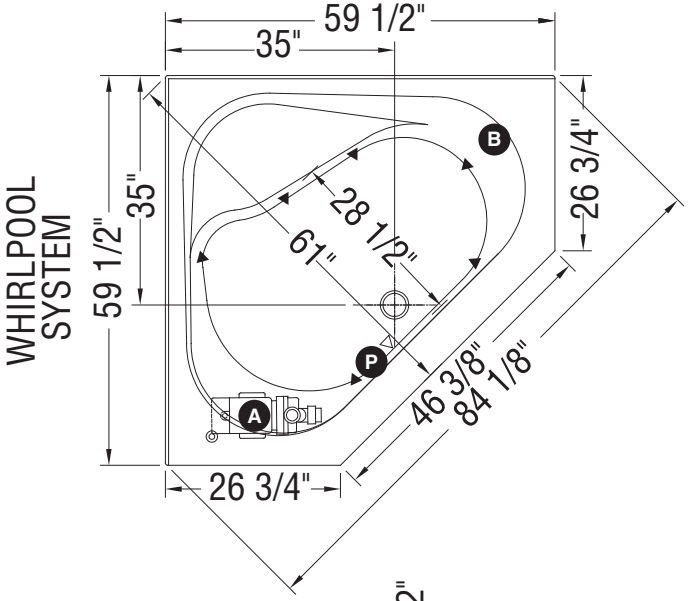

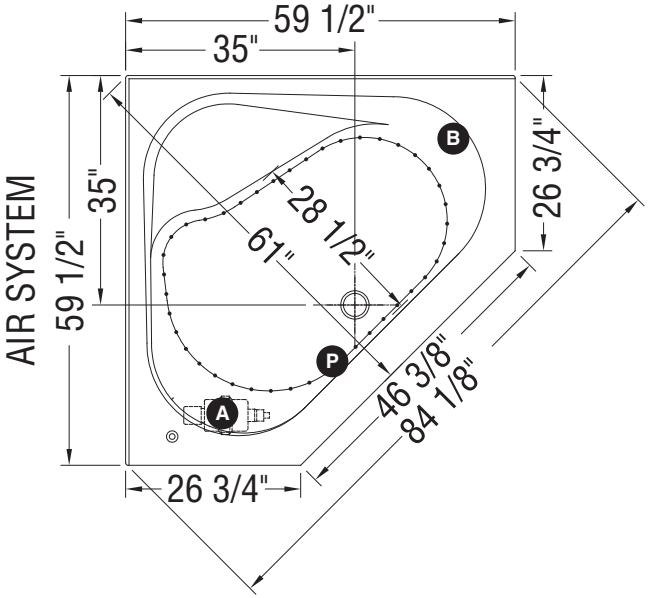

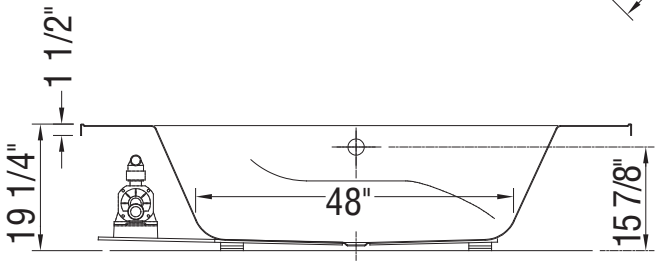

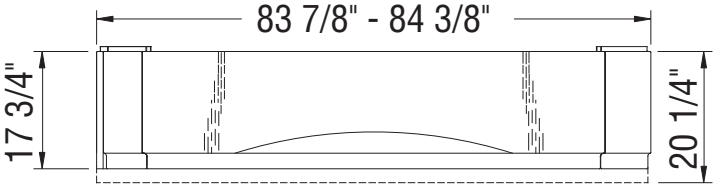

Ⓐ : Standard blower and/or pump location (▲) : Indicates Whirlpool jets positioning
Ⓑ : Optional blower and/or pump location (•) : Indicates airjets positioning
Ⓟ : Indicates optional grab bar positioning (△) : Indicates suction positioning

All dimensions are approximate. Structure measurements must be verified against the unit to ensure proper fit.